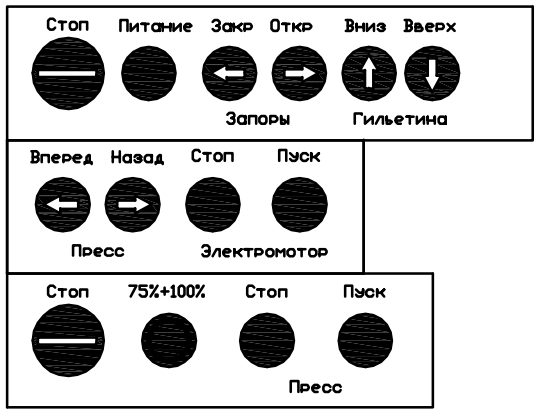

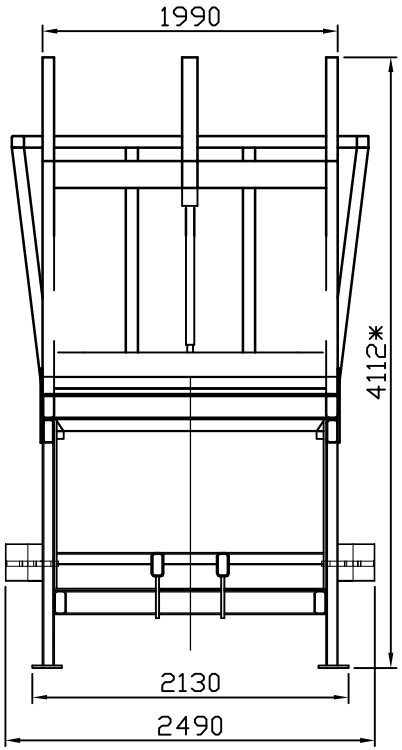

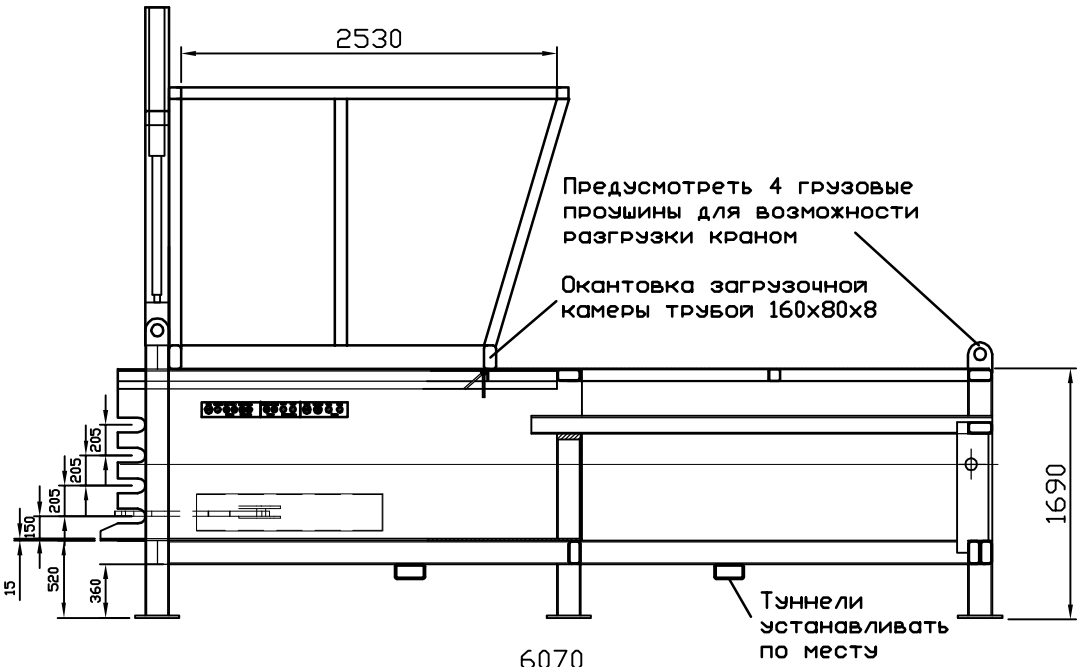

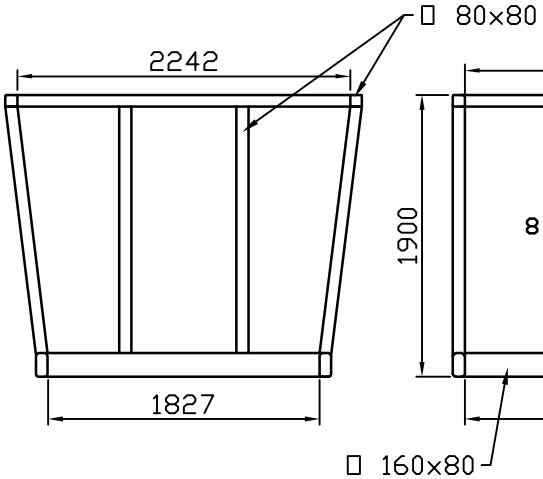

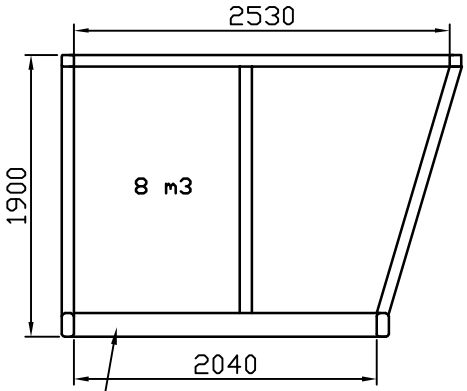

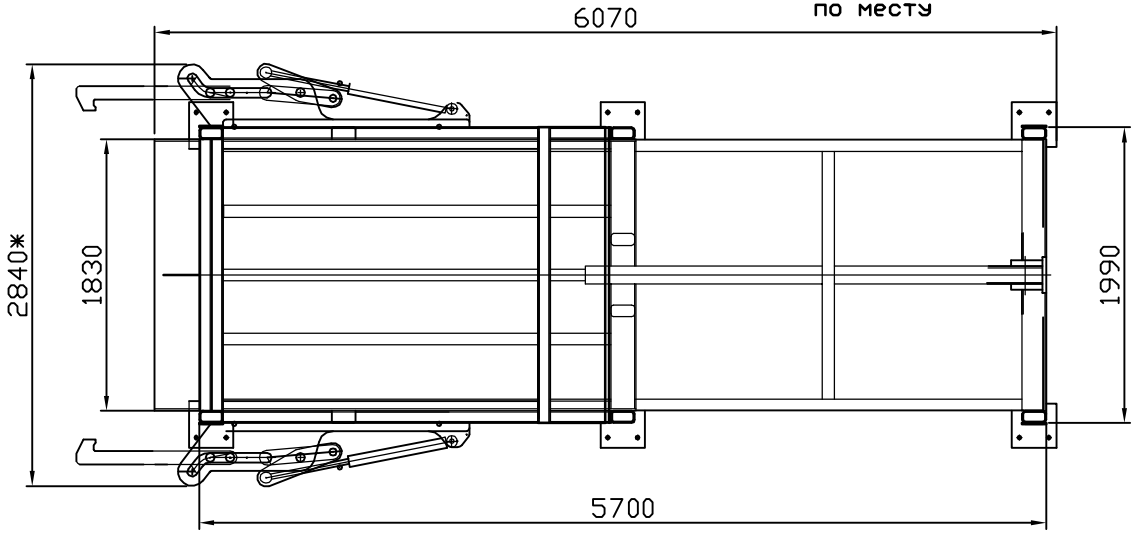

		Dwg nr: ETS-45-00		
Client: -		Time of delivery -	Date: 25.05.2017	Page: 1/1
Appendix: ---	Truck: -	ecopress Peterburi tee 47, 11415 Tallinn Harjumaa, ESTONIA	Serial number: ETS-	
Info: Ecopress transfer station ETS-45				