① Loading from ground level

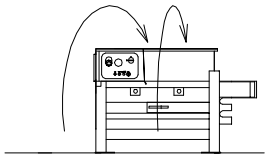

② Chamber with side loading

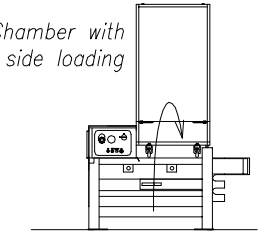

③ Loading from ramp

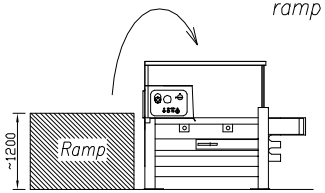

④ Loading with wall hopper

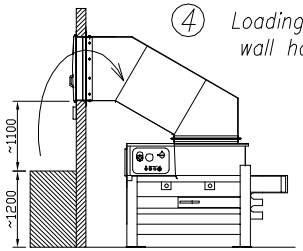

⑤ Compactor with guillotine

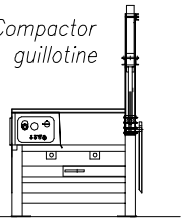

MODEL	ESC Compact	ESC Mega
Compactor length (L1), mm	2520	2970
Electric motor, kW	5,5/7,5	5,5/7,5
Number of hydraulic cylinders	2	2
Compaction force (nominal), T	28,2/32,3	28,2/32,3
Compaction force (maximum), T	29,6/35,3	29,6/35,3
Specific pressplate pressure, kg/cm2	3,05/3,89	3,05/3,89
Dry cycle time, sec	43	52
Capacity per stroke, m3	0,94	1,34
Capacity per hour, m3	75,2	92,8
Container cubic capacity, m3	(L), mm	(L), mm
15	4000	4000
20	4500	4500
25	5000	5000
30	6000	6000
35	6500	6500
40	7000	7000

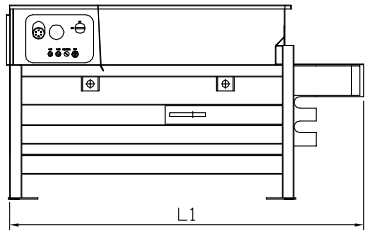

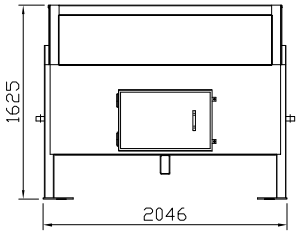

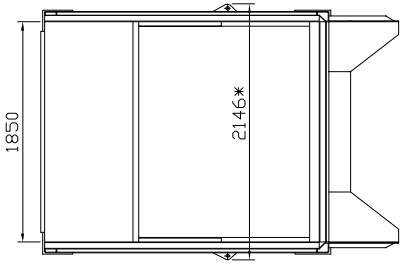

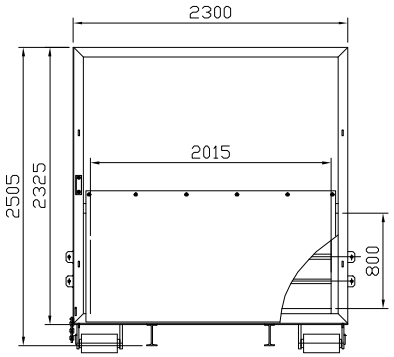

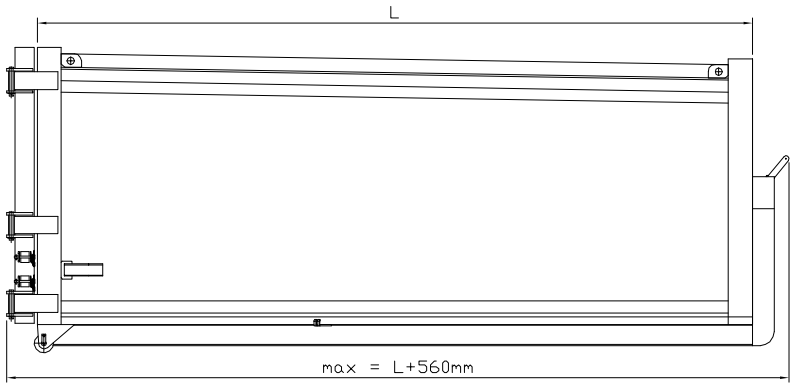

⑥ Binlift (front, side)

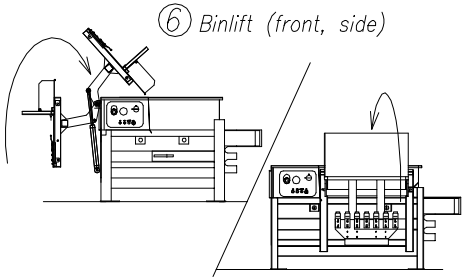

ecopress Peterburi tee 47, 11415 Tallinn Harjumaa, ESTONIA	Date: 09.09.2020	Appendix: ---	Sheet 1/1	Drawing nr.:
	Name: ECOPRESS Stationary Compactor Mega/Compact specification			Revision: –
				Drawn by: S.Z.